NORTH AMERICAN KITCHEN SOLUTIONS INCORPORATED

Grease Duct Spec

Model:

SW-NAKS-KIT013

Single Wall Flanged 18” Vertical

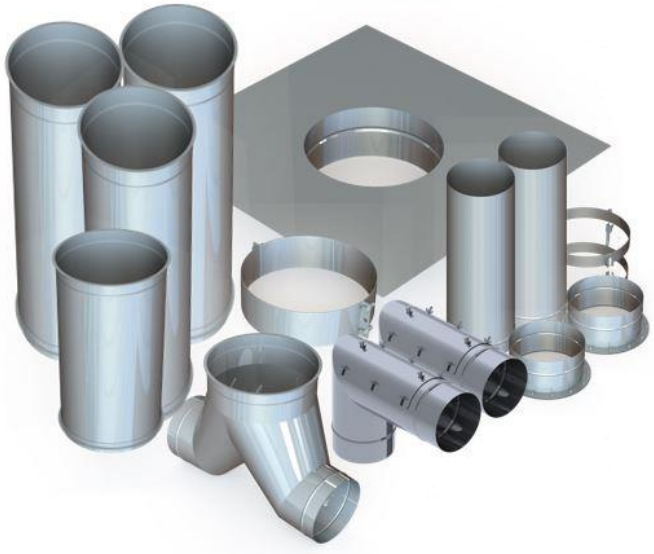

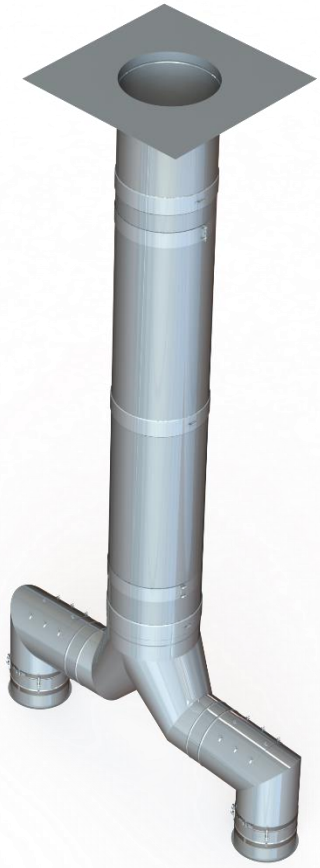

NAKS Inc
172 Reaser Ct
Elyria, OH 44035

Tel: (440) 365-4567
Fax: (440) 365-2100
www.naksinc.com

FORM# SW-NAKS-KIT001 (06/2018)

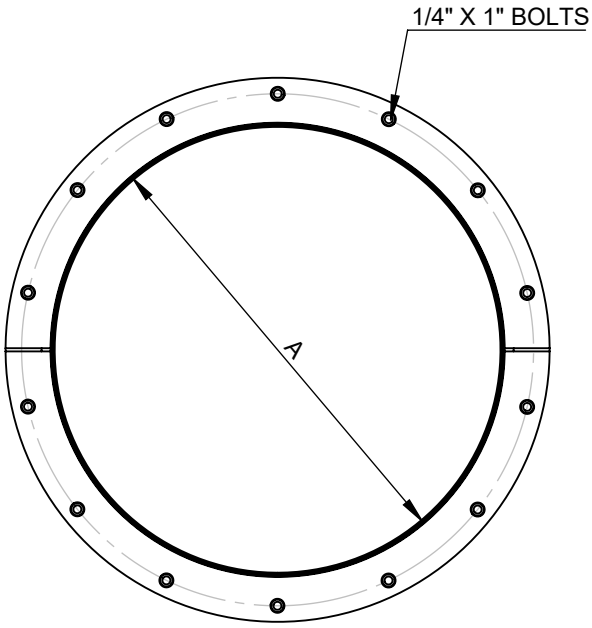

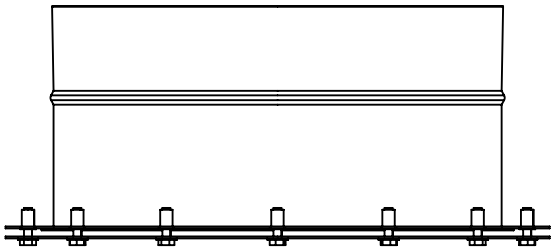

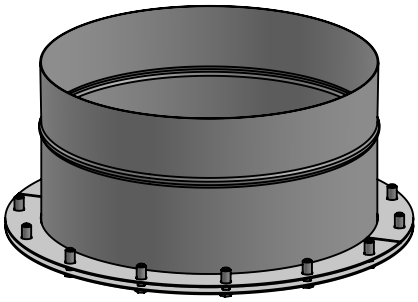

Ø	10	11	12	13	14	16	18	20	22
A	10	11	12	13	14	16	18	20	22

material: inside/outside 304	surface: inside/outside BA	inch / lb			scale
		revisions-no.			format US LETTER
			date	name	description No Weld Hood Adapter
		drawn by			sheet
		checked by			
		approved by			code SWNAKSØ-NWHA
		modified by			drawing no.

NORTH AMERICAN KITCHEN SOLUTIONS INCORPORATED

© NAKS Inc. All rights reserved, also regarding any disposal, exploitation, editing, distribution, as well as in the event of applications for industrial property rights.

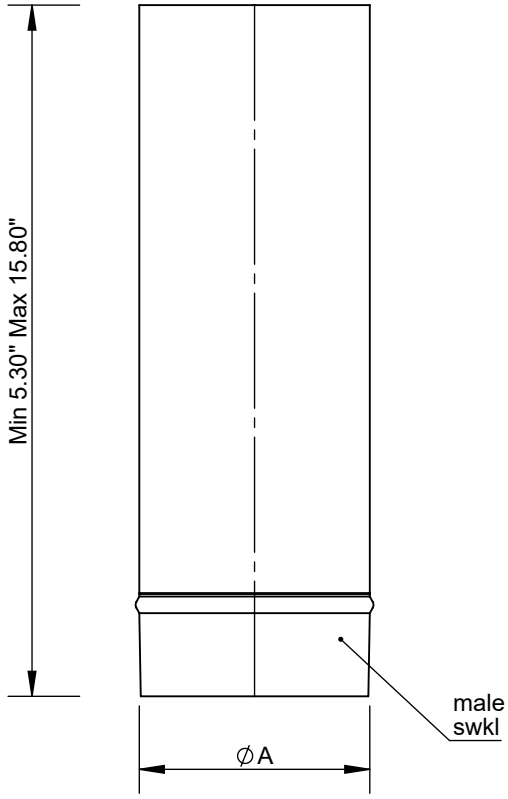

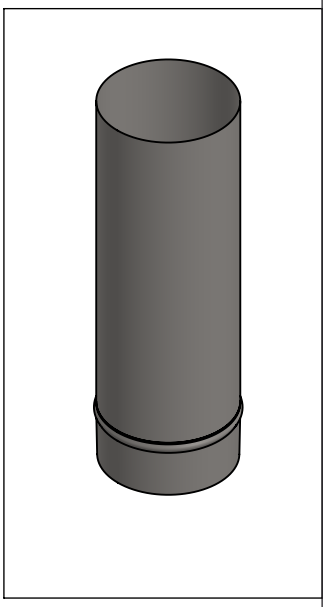

Ø	10	11	12	13	14	16	18	20	22
A	10	11	12	13	14	16	18	20	22

material: inside/outside	304	surface: inside/outside	BA
inch / lb			
revisions-no.			

	date	name
drawn by		
checked by		
approved by		
modified by		

NORTH AMERICAN KITCHEN SOLUTIONS INCORPORATED

description 18" Cut Length

code SWNAKSØ-18CL

drawing no.

scale

format US LETTER

sheet

© NAKS Inc. All rights reserved, also regarding any disposal, exploitation, editing, distribution, as well as in the event of applications for industrial property rights.

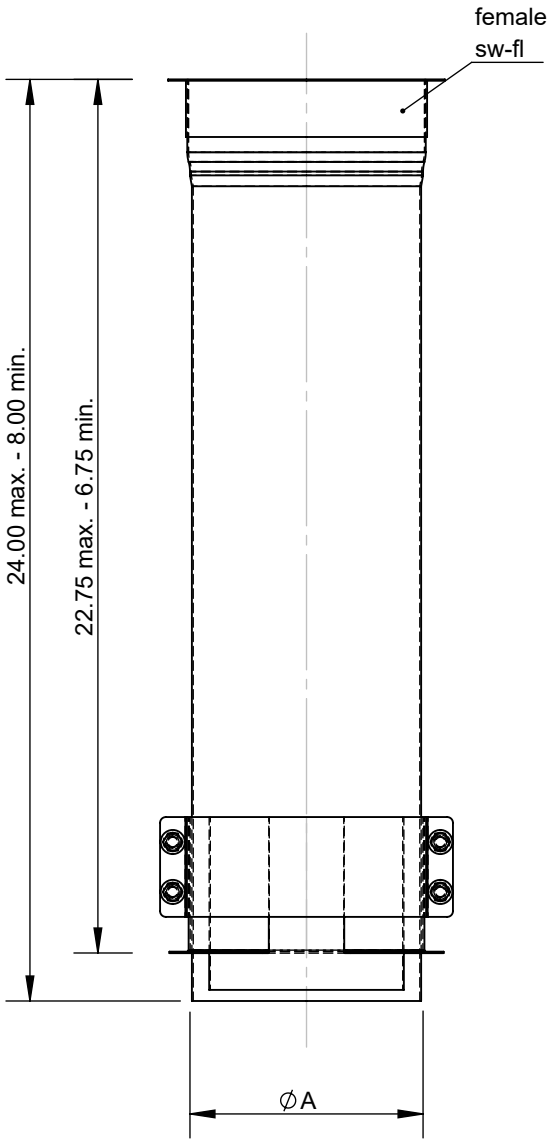

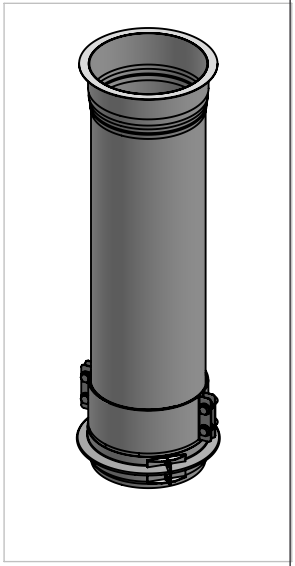

Ø	18	20	22
A	18	20	22

material: inside/outside	304	surface: inside/outside	BA
inch / lb			
revisions-no.			

	date	name
drawn by		
checked by		
approved by		
modified by		

NORTH AMERICAN KITCHEN SOLUTIONS INCORPORATED

description: 24" Adjustable Length

code: SWNAKSØ-24AL

drawing no.

scale

format: US LETTER

sheet

© NAKS Inc. All rights reserved, also regarding any disposal, exploitation, editing, distribution, as well as in the event of applications for industrial property rights.

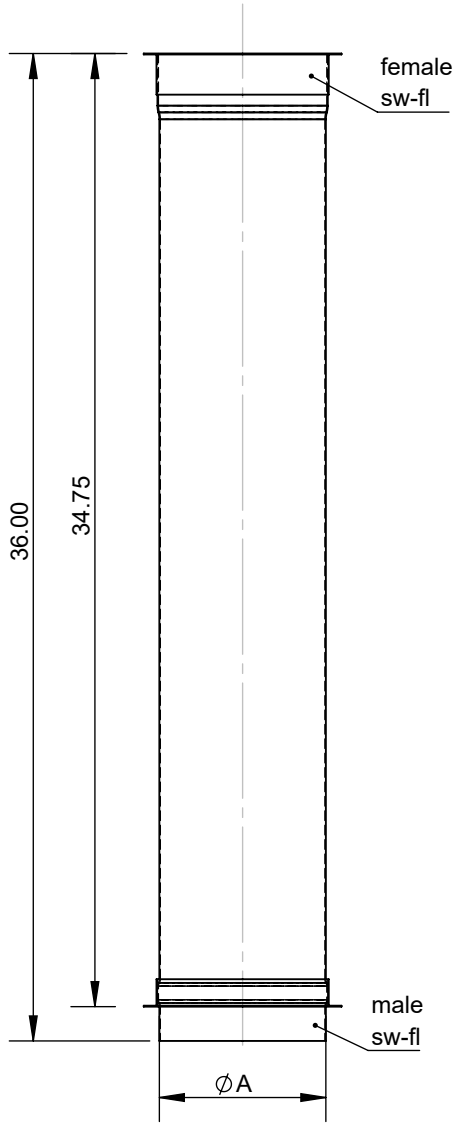

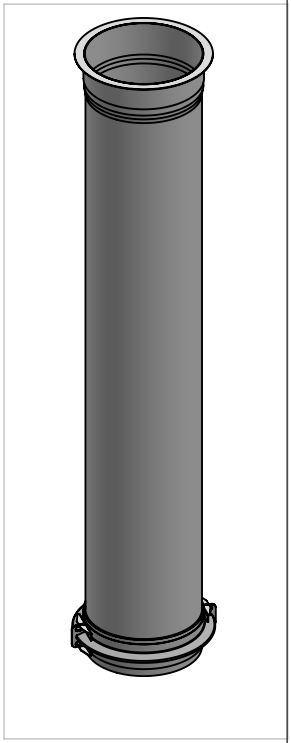

Ø	18	20	22
A	18	20	22

material: inside/outside	304	surface: inside/outside	BA
inch / lb		revisions-no.	

	date	name
drawn by		
checked by		
approved by		
modified by		

NORTH AMERICAN KITCHEN SOLUTIONS INCORPORATED

description: 36" Fixed Length

code: SWNAKSØ-36L

drawing no.

scale

format: US LETTER

sheet

© NAKS Inc. All rights reserved, also regarding any disposal, exploitation, editing, distribution, as well as in the event of applications for industrial property rights.

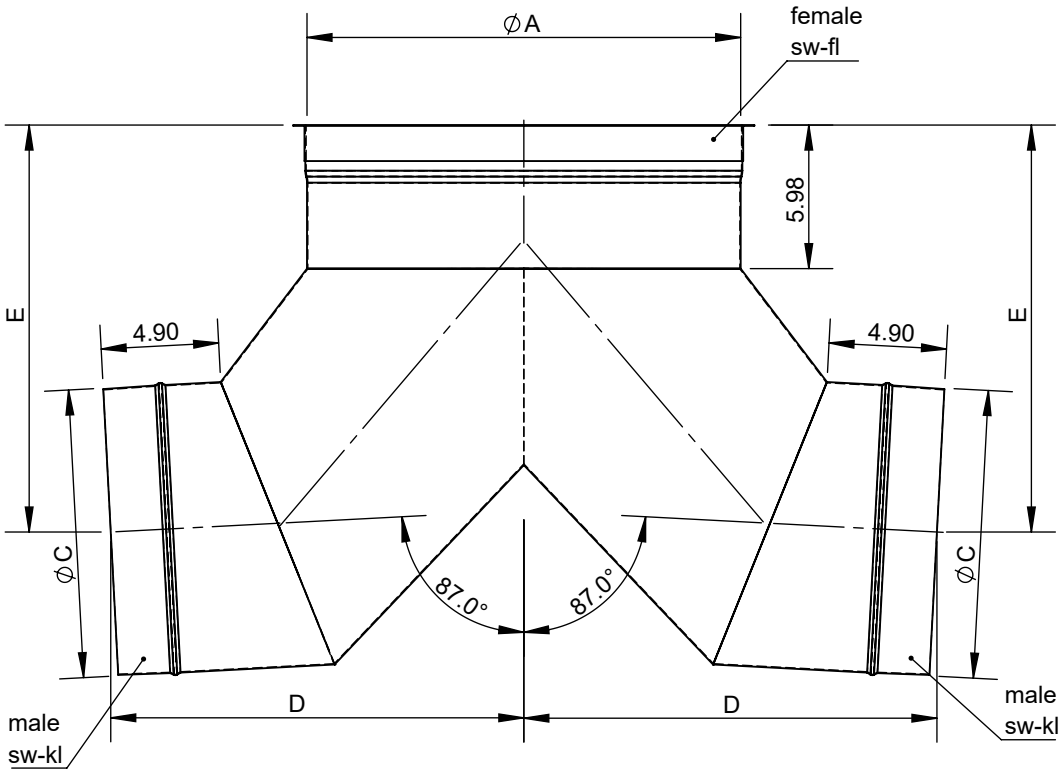

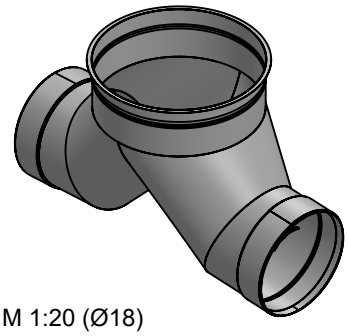

M 1:20 (Ø18)

Ø	18	20	22
A	18	20	22
C	12	14	16
D	17.21	18.16	19.11
E	16.96	18.02	19.07
lb	20.9	24.62	28.41

material: inside/outside

surface: inside/outside

inch / lb

revisions-no.

NORTH AMERICAN KITCHEN SOLUTIONS INCORPORATED

scale 1:8

format US LETTER

sheet 1 of 1

	date	name
drawn by	12/20/2018	DAR
checked by		
approved by		
modified by	3/18/2019	DAR

description 87° Bull Head Tee

code SWNAKSØ-87BHTØ

drawing no.

UL-no.

© NAKS Inc. All rights reserved, also regarding any disposal, exploitation, editing, distribution, as well as in the event of applications for industrial property rights.

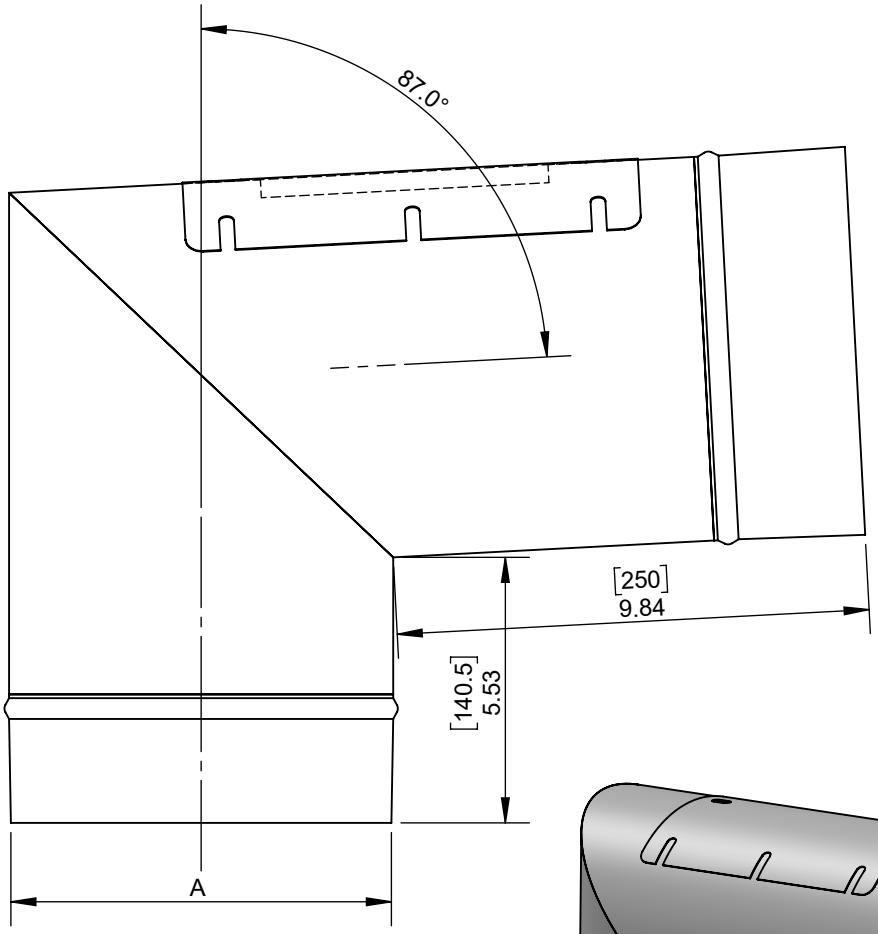

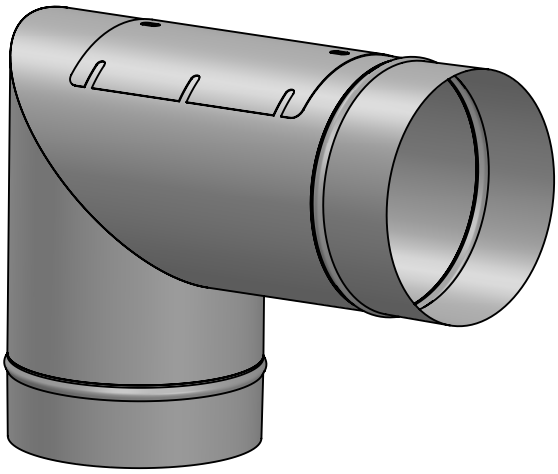

Ø	10	11	12	13	14	16	18	20	22
A	10	11	12	13	14	16	18	20	22

material: inside/outside	304	surface: inside/outside	BA
inch / lb		revisions-no.	

	date	name
drawn by		
checked by		
approved by		
modified by		

NORTH AMERICAN KITCHEN SOLUTIONS INCORPORATED

description: 87 Degree Elbow w/ Access

code: SWNAKSØ-87EA

drawing no.

scale

format: US LETTER

sheet

© NAKS Inc. All rights reserved, also regarding any disposal, exploitation, editing, distribution, as well as in the event of applications for industrial property rights.

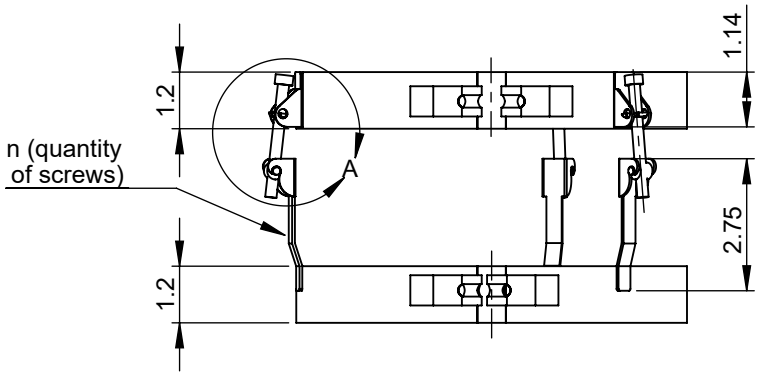

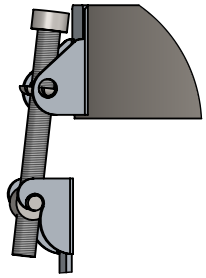

DETAIL A

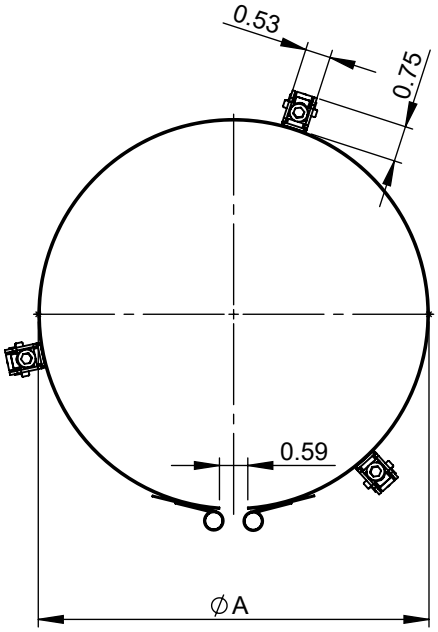

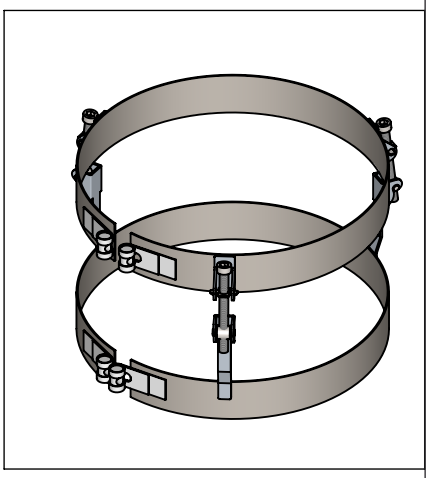

Ø	10	11	12	13	14	16	18	20	22
A	10	11	12	13	14	16	18	20	22

material: inside/outside	304	surface: inside/outside	BA
inch / lb		revisions-no.	A

	date	name
drawn by		
checked by		
approved by		
modified by		

NORTH AMERICAN KITCHEN SOLUTIONS INCORPORATED

description: KL Clamp

code: SWNAKSØ-KLC

drawing no.

scale

format: US LETTER

sheet

© NAKS Inc. All rights reserved, also regarding any disposal, exploitation, editing, distribution, as well as in the event of applications for industrial property rights.

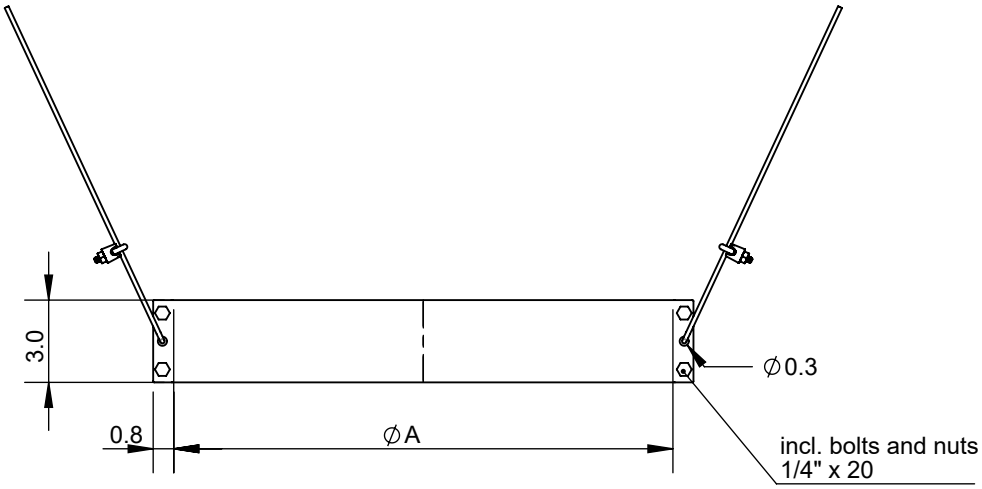

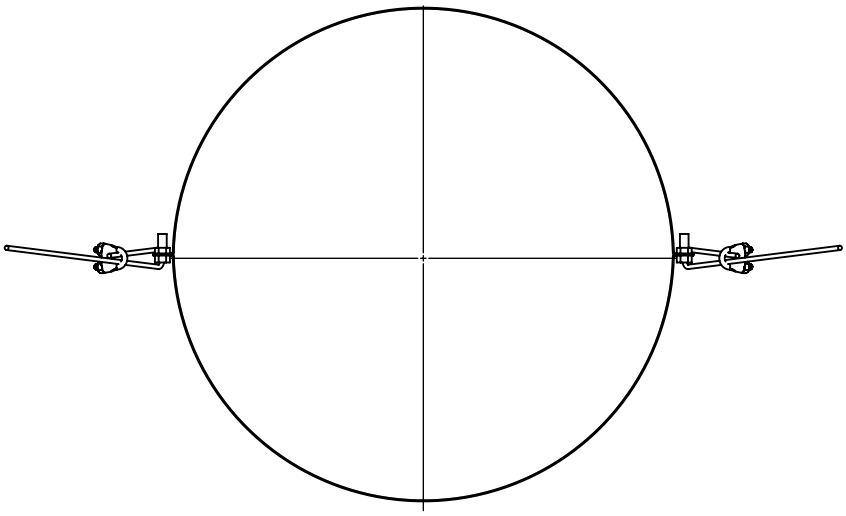

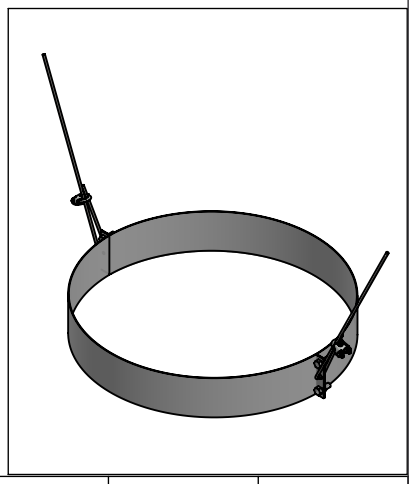

Ø	10	11	12	13	14	16	18	20	22
A	10	11	12	13	14	16	18	20	22

material: inside/outside	304	surface: inside/outside	BA
inch / lb		revisions-no.	A

	date	name
drawn by		
checked by		
approved by		
modified by		

NORTH AMERICAN KITCHEN SOLUTIONS INCORPORATED

description: Light Support Band

code: SWNAKSØ-LSB

drawing no.

scale

format: US LETTER

sheet

© NAKS Inc. All rights reserved, also regarding any disposal, exploitation, editing, distribution, as well as in the event of applications for industrial property rights.

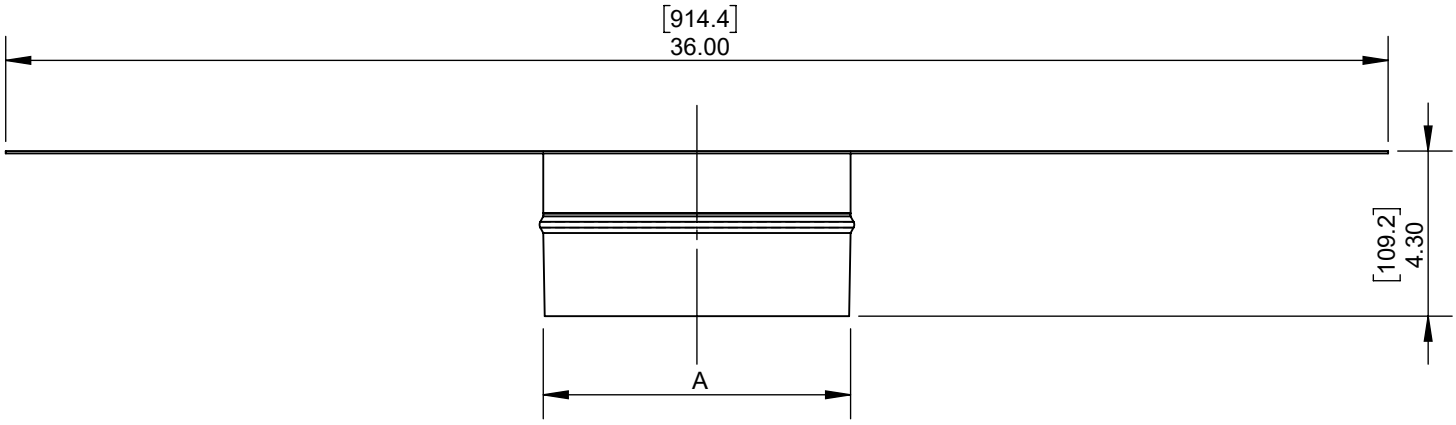

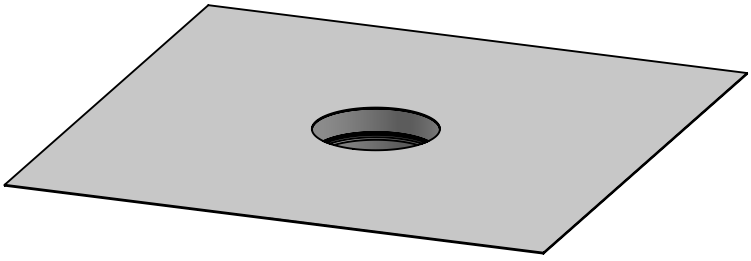

Ø	10	11	12	13	14	16	18	20	22
A	10	11	12	13	14	16	18	20	22

material: inside/outside	304	surface: inside/outside	BA
inch / lb		revisions-no.	

	date	name
drawn by		
checked by		
approved by		
modified by		

NORTH AMERICAN KITCHEN SOLUTIONS INCORPORATED

description: Fan Plate Adapeter - End 36"x36"

code: SWNAKSØ-FPE:36x36

drawing no.

scale

format: US LETTER

sheet

© NAKS Inc. All rights reserved, also regarding any disposal, exploitation, editing, distribution, as well as in the event of applications for industrial property rights.